6’ Dye Sub Front Table Throw

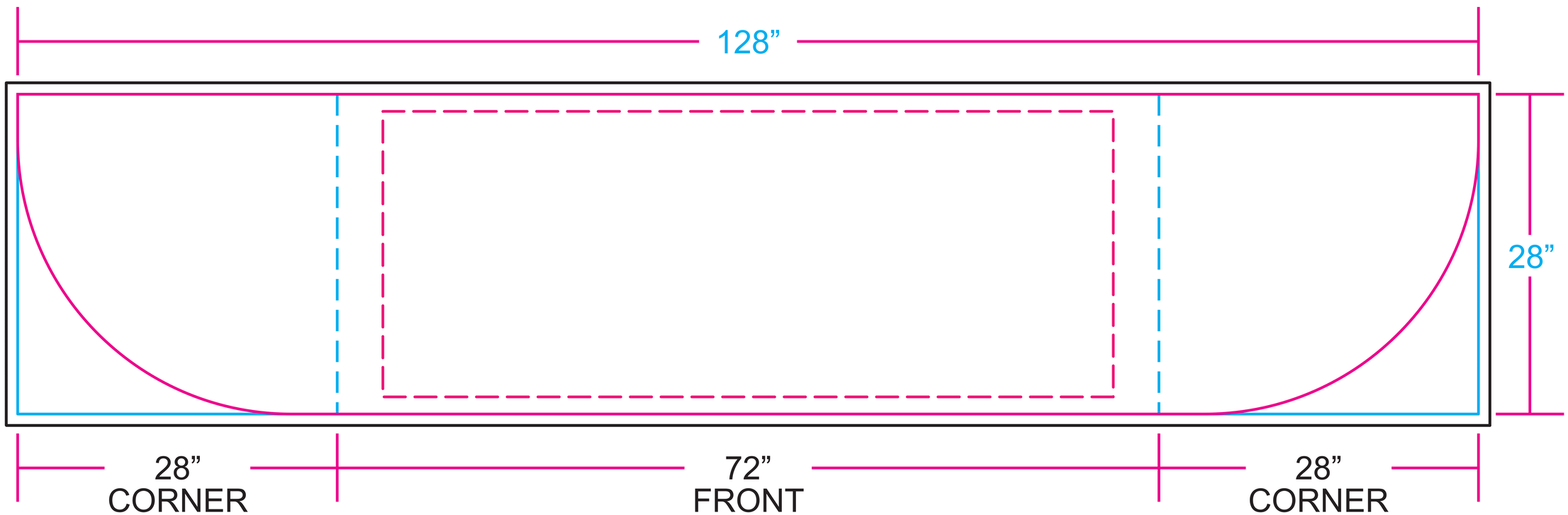

KEEP ALL CRUCIAL ARTWORK ELEMENTS SUCH AS TEXT/LOGOS/IMAGES WITHIN LIVE AREA OF 64”w X 25”h

——— **PRINT SIZE: 130”w X 30”h**

——— **FINAL SIZE: 128”w X 28”h**

--------- **TABLE FRONT: 72”w X 28”h**

--------- FRONT LIVE AREA: 64”w X 25”h

8’ Dye Sub Front Table Throw

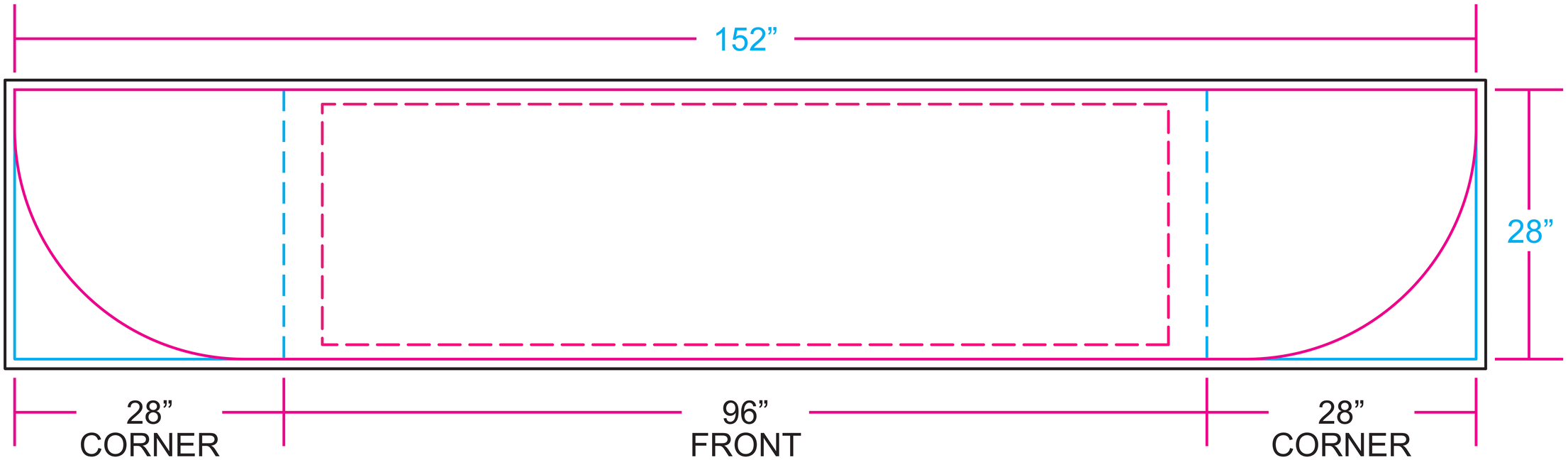

KEEP ALL CRUCIAL ARTWORK ELEMENTS SUCH AS TEXT/LOGOS/IMAGES WITHIN LIVE AREA OF 88”w x 25”h

PRINT SIZE: 154”w X 30”h

FINAL SIZE: 152”w X 28”h

TABLE FRONT: 96”w X 28”h

FRONT LIVE AREA: 88”w X 25”h