visionary DESIGNS™ © 2017

Order #XXXXX VK-2956 10'x20' Inline Display

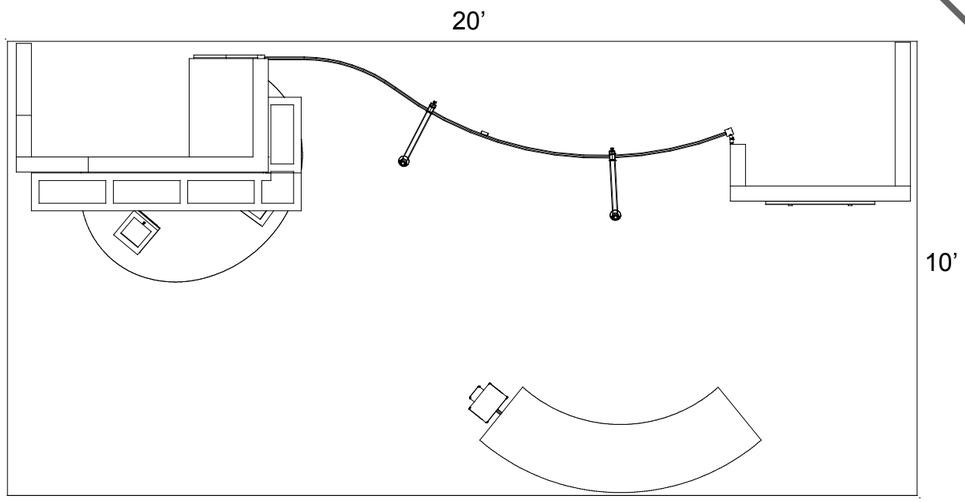

Plan View

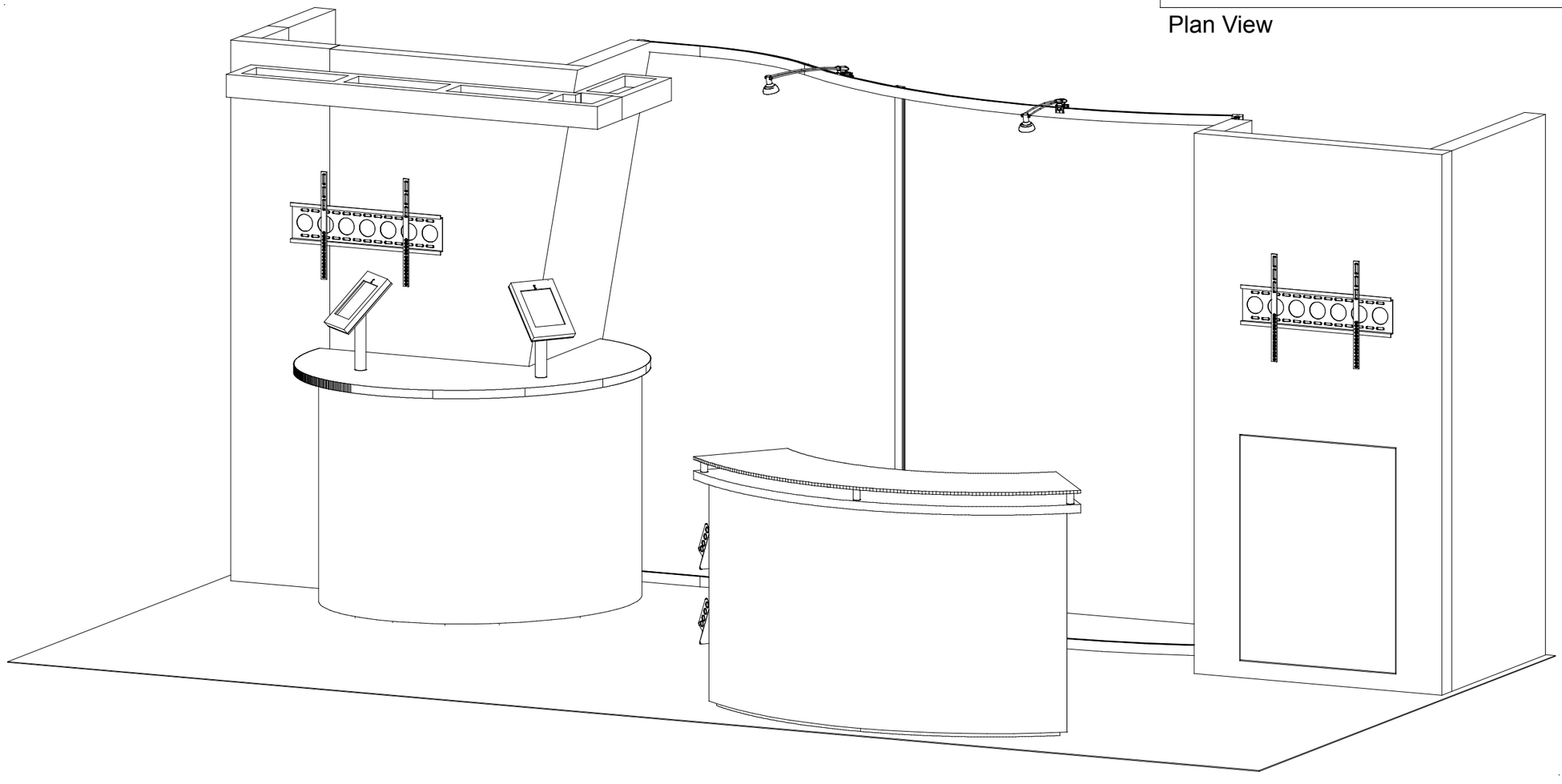

SETUP INSTRUCTIONS

If you would like to tell us about your experience with your setup instructions please email us at **info@classicexhibits.com**

General Setup Instructions

- Read entire setup instruction manual prior to unpacking parts and pieces.

- The setup instructions are created specifically for this configuration.

- Setup instructions are laid out sequentially in steps, including exploded views with detailed explanation for assembly.

Cleaning & Packing

- For Cleaning Metal, Plex, & Laminate Parts: Use a **MILD NON-ABRASIVE** cleanser and soft cloth/paper towel to clean all surfaces.

- Keep exhibit components away from heat and prolonged sun exposure.
Heat and UV exposure will warp and fade components.

- Retain all provided Packing Materials.
All provided packing materials are for ease of repacking & component protection.

Disassembly

- For loss prevention, tighten all setscrews and locks during disassembly

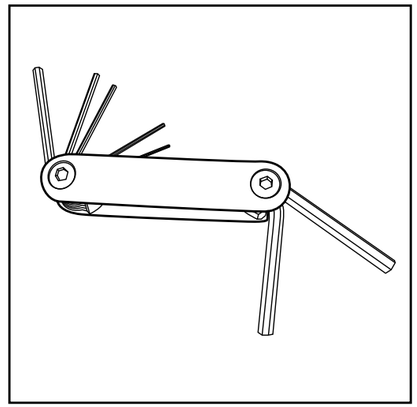

Hex Tool - Essential for Assembly

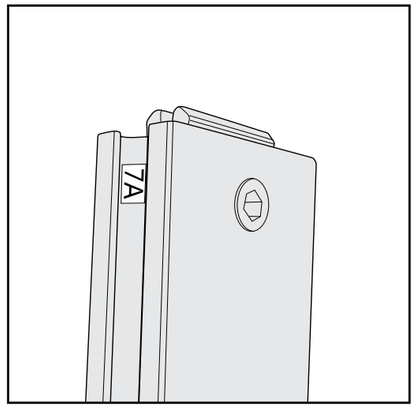

Part Identification - Numbering

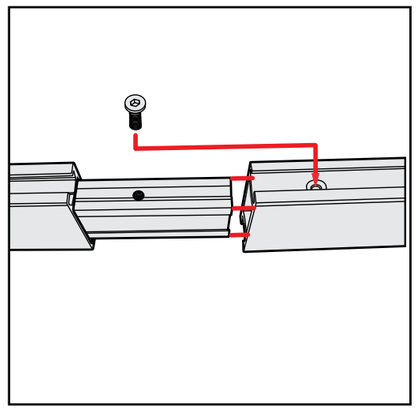

Spline Connection

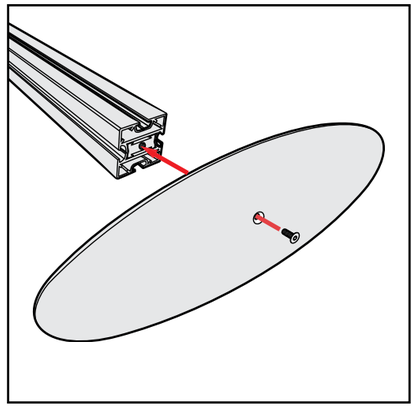

Base Plate & Extrusion Connection

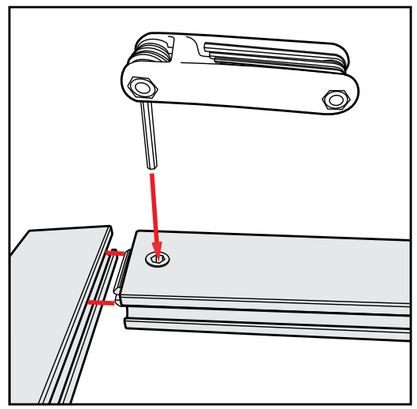

Extrusion & Lock Connection

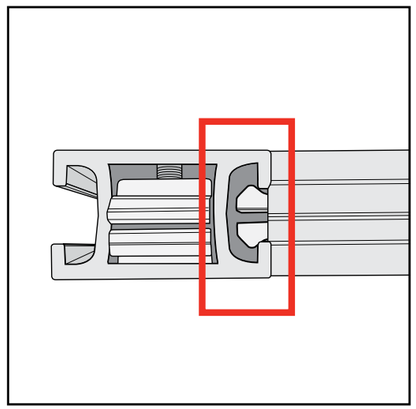

Engaged Lock

WARNING

DO NOT USE POWER TOOLS

LADDERS OR LIFTS MAY BE REQUIRED

ALL CONNECTIONS MUST BE TIGHTLY SECURED

Order #XXXXX Crate Packing

Order #XXXXX Backwall Assembly

Item	Qty.	Description
A	1	19”w x 95.5”h Wall Panel
B	1	11”w x 95.5”h Wall Panel
C	1	19”w x 95.5”h Wall Panel
D	1	47.5058”w x 95.5”h Wall Panel w/ Cabinet Door
E	1	26”w x 95.4998”h Angled Wall Panel

Steps:
1) Connect Wall Panels in alphabetical order.
See Custom Cam Lock Attachment detail.

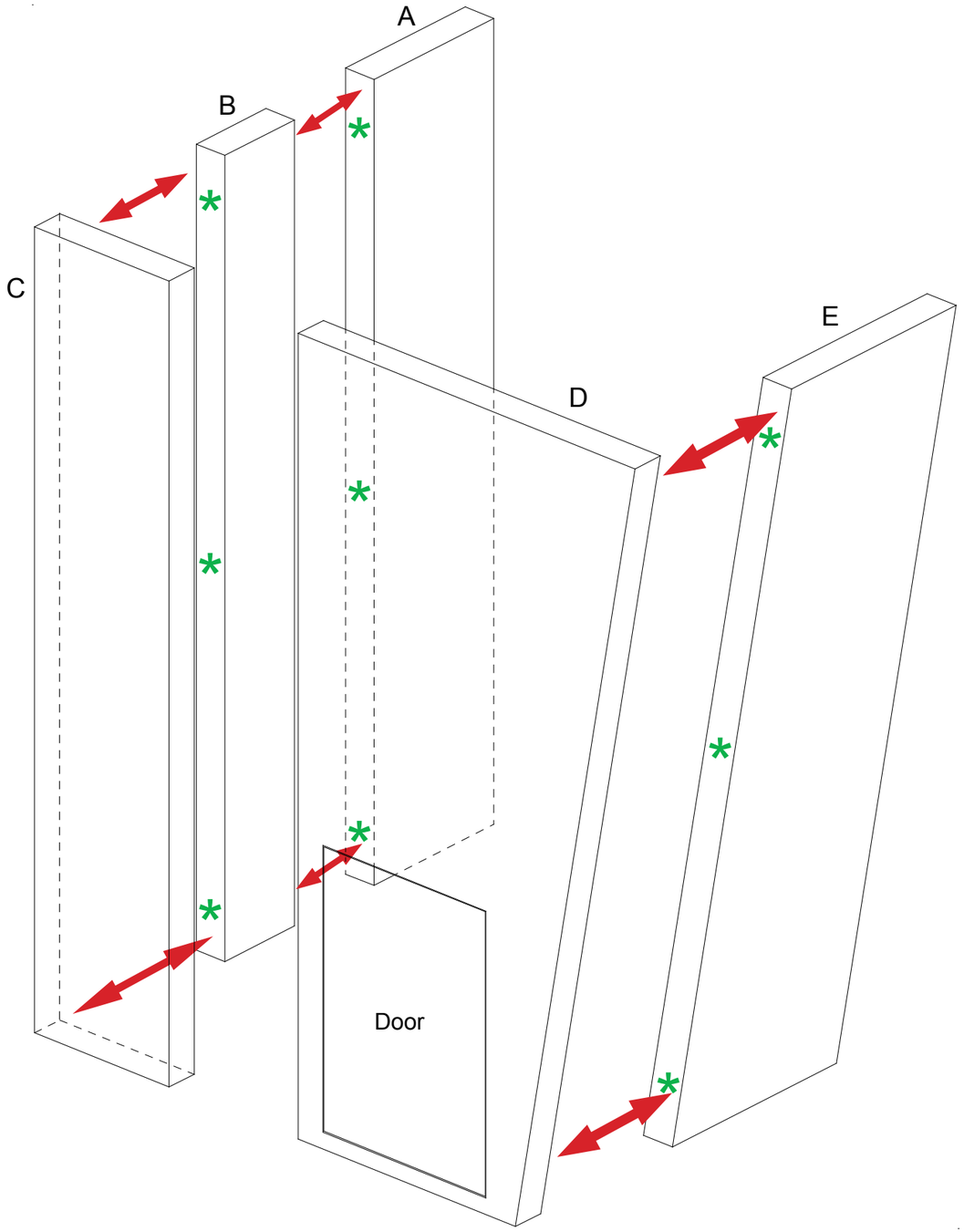

✱ Custom Cam Lock Attachment

Place Hex Tool in hole on side of Wall Panel, then rotate to activate Lock and attach Wall Panels together.

Item	Qty.	Description
F	1	11"w x 95.5"h Wall Panel
G	1	47.5"w x 95.5"h Wall Panel w/ Door
H	1	38"w x 95.5"h Wall Panel

Steps:
1) Connect Wall Panels in alphabetical order.
   See Custom Cam Lock Attachment detail.
2) Attach monitor Mount Plate to Wall D
   See Monitor Mount Attachment detail.

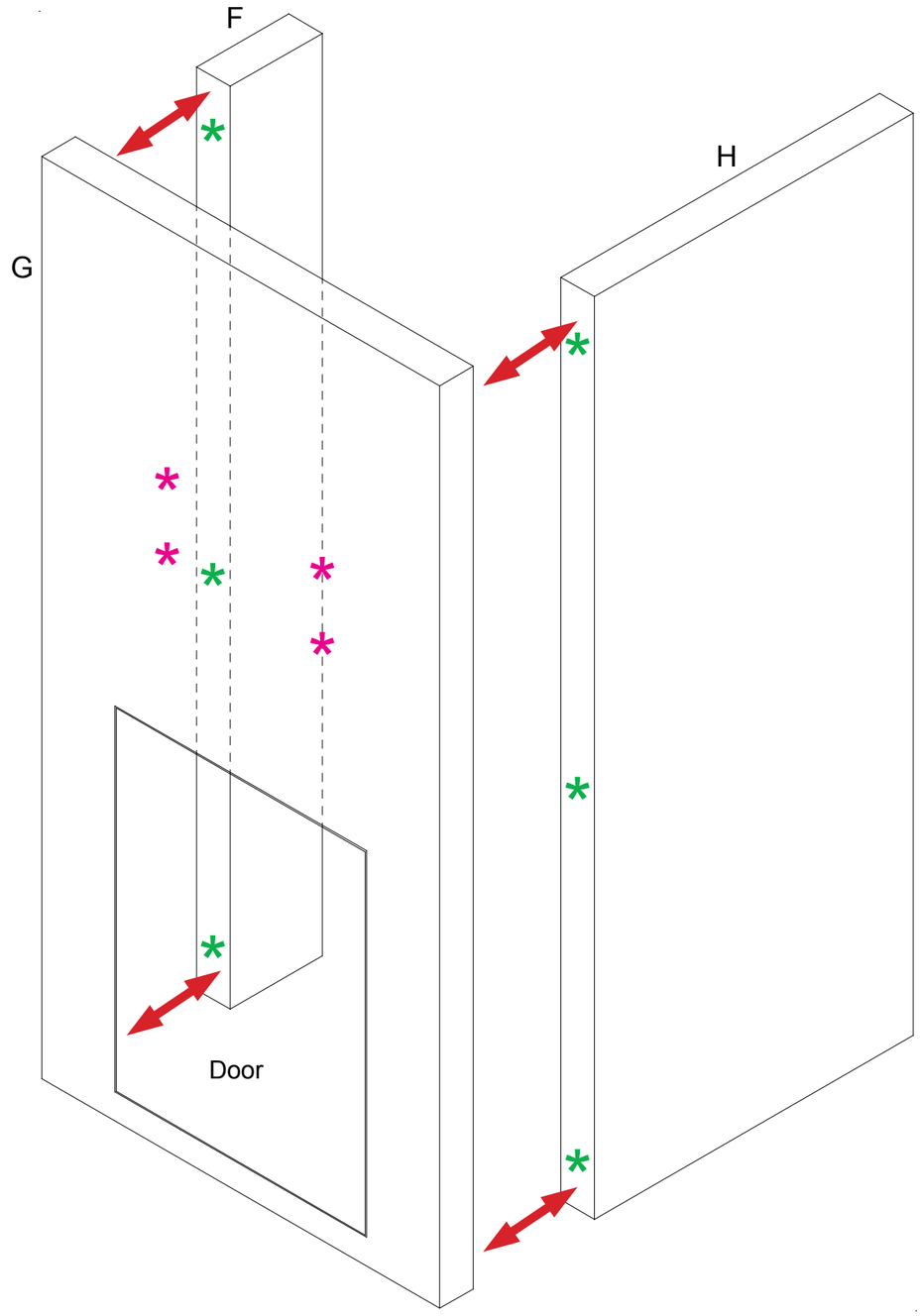

* Monitor Mount Attachment

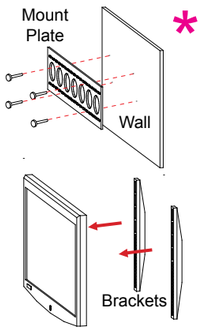

1) Attach monitor Mount Plate to Wall, using bolts.
2) Attach monitor Brackets to back of monitor.
3) Hook Brackets over top of Mount Plate, secure with bolts on bottom of brackets.

* Custom Cam Lock Attachment

Place Hex Tool in hole on side of Wall Panel, then rotate to activate Lock and attach Wall Panels together.

Order #XXXXX Backwall Assembly (cont'd)

Item	Qty.	Description
1	1	97.292"h S40 Vertical Extrusion w/ Mitered End (attached to Wall Panel E)
2	1	95.5"h S40 Vertical Extrusion w/ Hinge
2A	1	95.5"h S10 Modul Connector (attached to Wall Panel F)
3	1	27.25"w Z45 Horizontal Extrusion
3A	1	25.9572"w Z45 Curved Horizontal Extrusion
4	1	92.3716"w Z45 Curved Horizontal Extrusion
5	1	10.7262"w Z45 Horizontal Extrusion
5A	1	25.9572"w Z45 Curved Horizontal Extrusion
6	1	92.3716"w Z45 Curved Horizontal Extrusion
7	1	95.5"h Z45 Vertical Extrusion

Steps:
1) Connect Horizontals [3], [3A], & [4] together. See Connector Bar detail. Repeat step for Horizontals [5], [5A], & [6].
2) Connect Vertical [2] to Vertical [2A]. See Hinge Attachment detail.
3) Attach Horizontal assemblies between Verticals [1] & [2/2A].
4) Connect Vertical [7] to the back of Horizontals [4] & [6]. See Vertical Stabilizer detail.

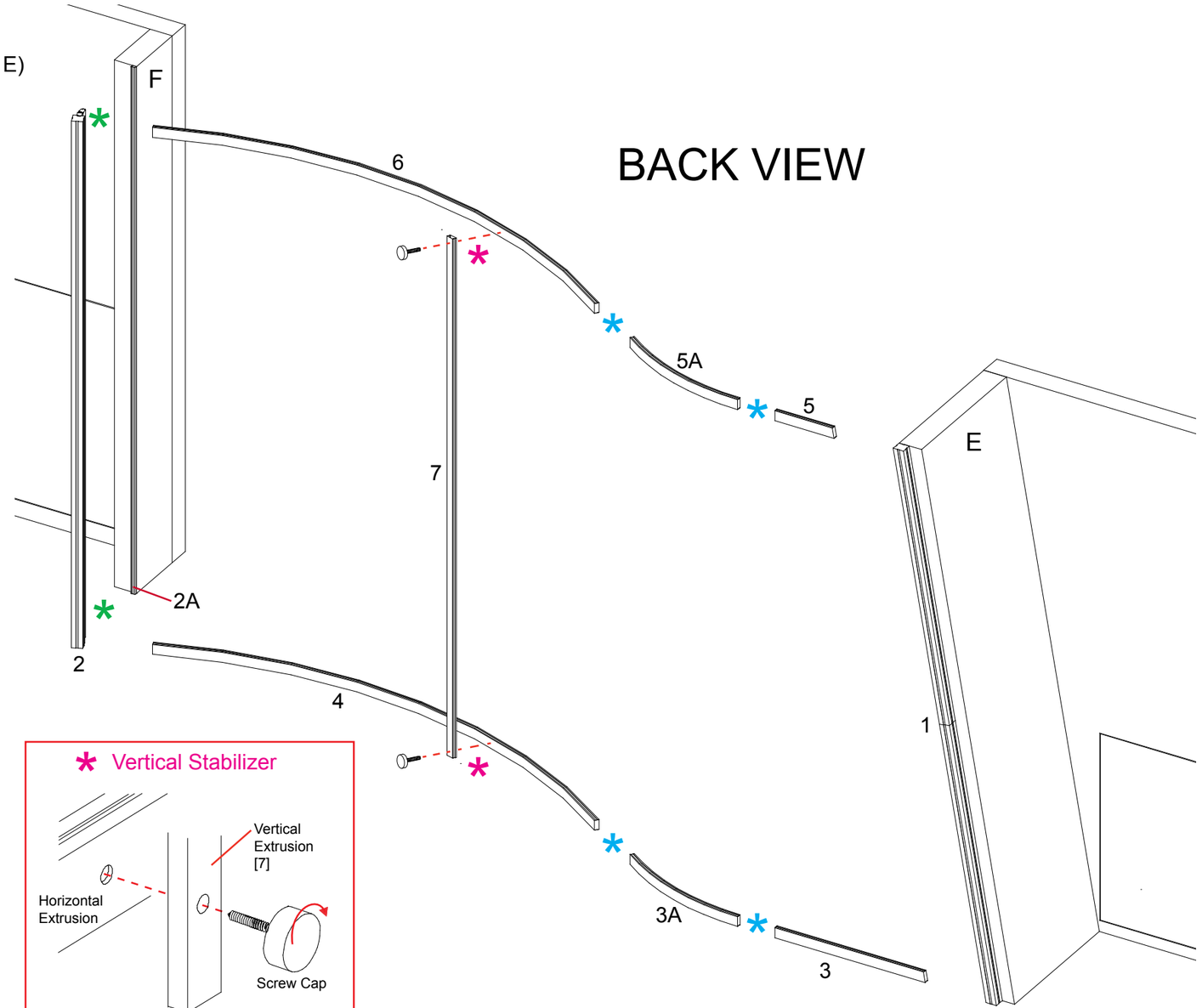

* Connector Bar

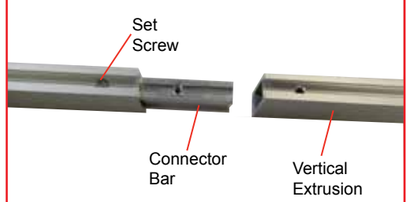

Slide Vertical Extrusion over fixed Connector Bar then tighten Set Screw secure.

* Hinge Attachment

1) Insert Hinge into grooves of Vertical Extrusions.
2) Fold Hinge to 'closed' position.
3) Tighten set screws to secure.

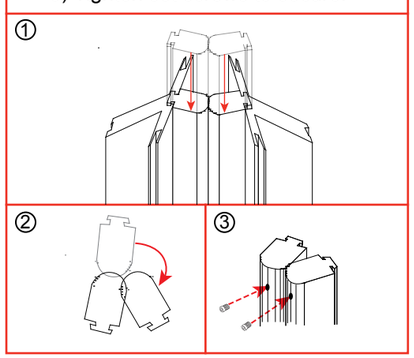

* Vertical Stabilizer

Insert Screw Cap thru hole of Vertical [7], then into threaded hole of Horizontal. Turn Screw Cap to secure Extrusions together.

Steps:
1) Attach Ceiling to Walls C, D, & E.
2) Attach monitor Mount Plate to Wall D
   See Monitor Mount Attachment detail.
3) Place assembled Backwall Counter
   next to Walls D & E.

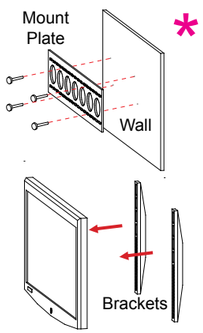

* Monitor Mount Attachment

1) Attach monitor Mount Plate to Wall, using bolts.
2) Attach monitor Brackets to back of monitor.
3) Hook Brackets over top of Mount Plate, secure with bolts on bottom of brackets.

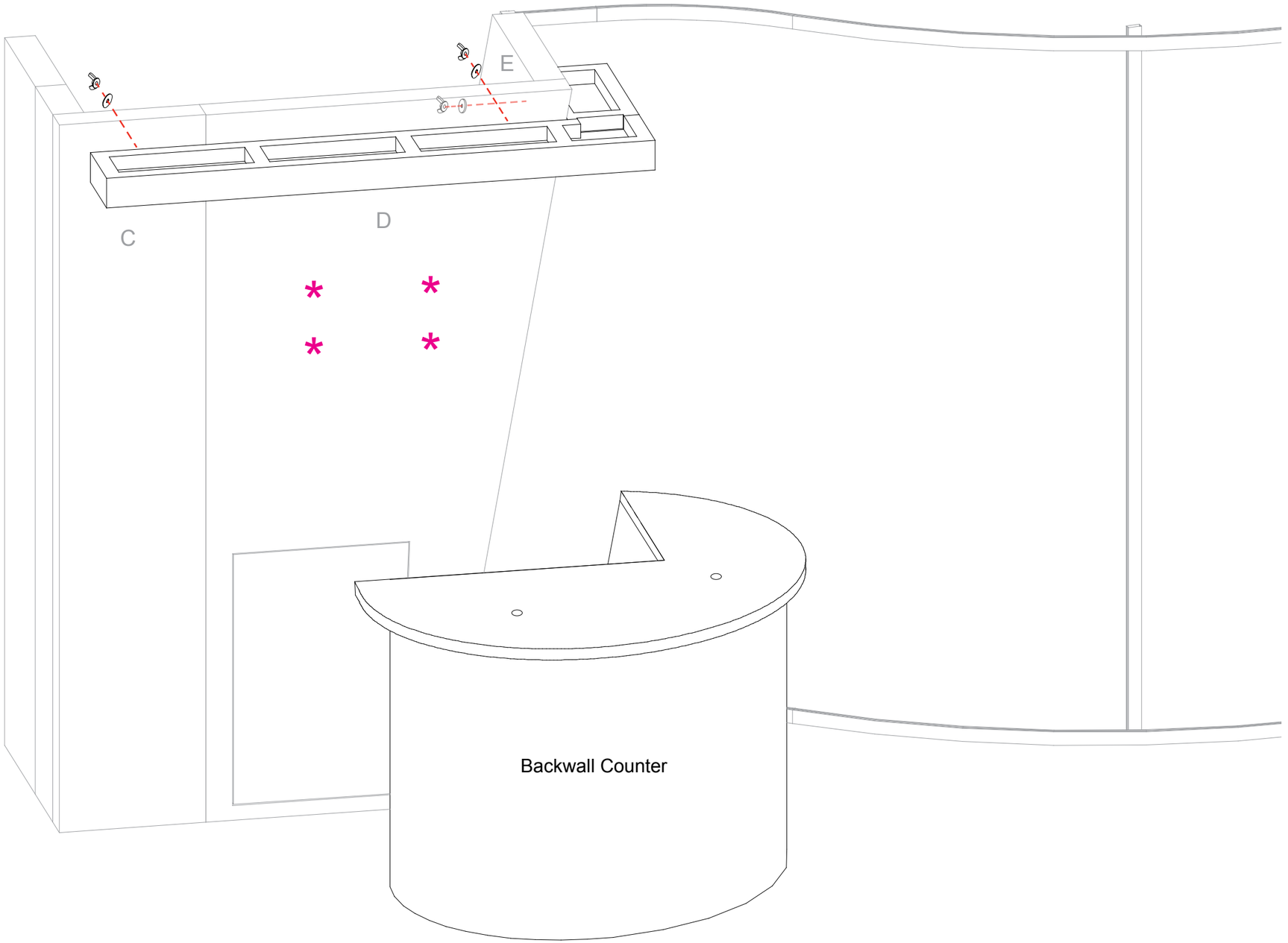

Steps:
1) Attach lights to upper extrusions of Backwall. See Light Connection detail.
2) Attach iPad Workstations to top of counter. See iPad Stand Attachment detail.
3) Apply graphic to Velcro on back of assembled Backwall.

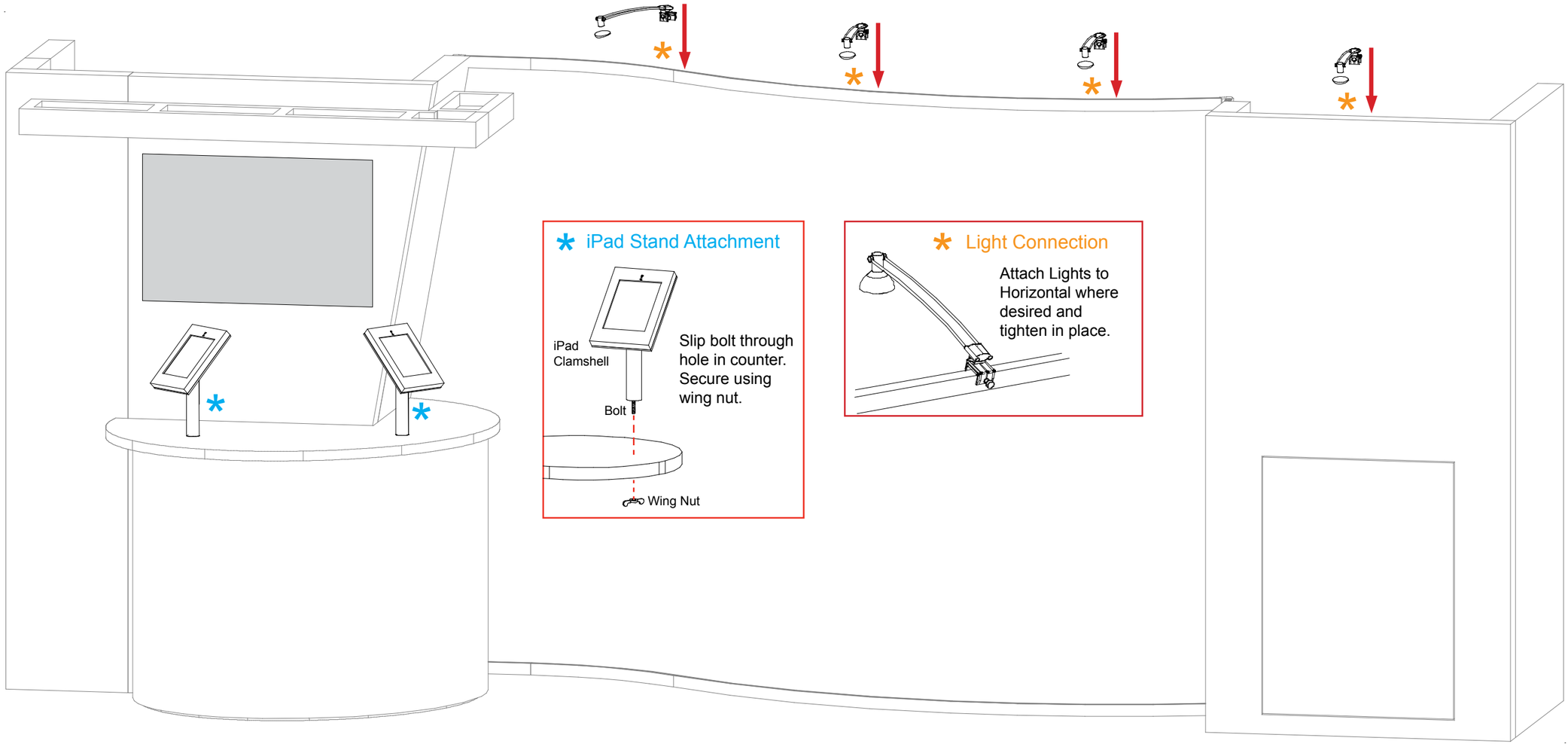

* iPad Stand Attachment

Slip bolt through hole in counter. Secure using wing nut.

* Light Connection

Attach Lights to Horizontal where desired and tighten in place.

Order #XXXXX MOD-1520 Reception Counter Assembly

Steps:
1) Connect Literature Holders or Waterfall Brackets to side of Reception Counter.
   See Literature Holder Attachment detail.
   See Waterfall Bracket Attachment detail.
2) Attach Plex Counter to top of assembled Reception Counter, using stand-off barrels.
   See Plex Counter Attachment detail.

* Literature Holder Attachment

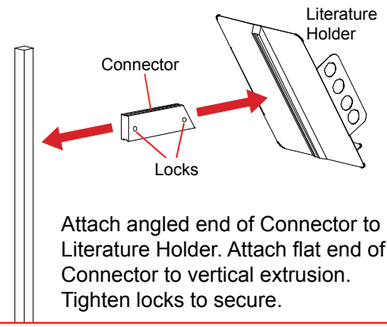

Attach angled end of Connector to Literature Holder. Attach flat end of Connector to vertical extrusion. Tighten locks to secure.

* Waterfall Bracket Attachment

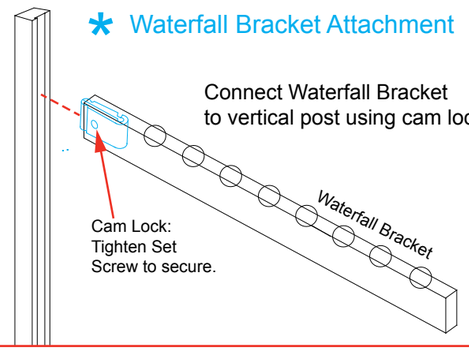

* Plex Counter Attachment

Turn Standoff Barrel into threaded hole on top of Counter to secure Standoff Barrel in place.

Place Plex Counter on top of Standoff Barrels.

Counter will rest on screws.

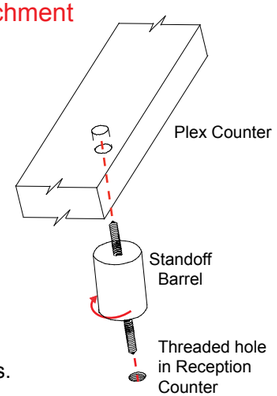

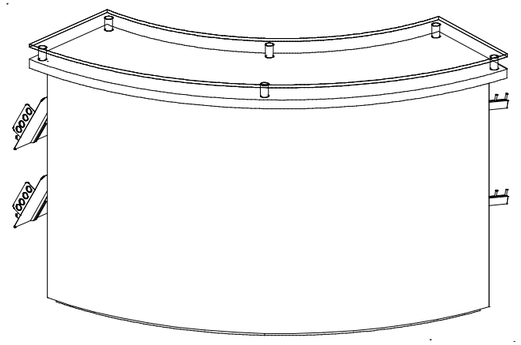

Front View

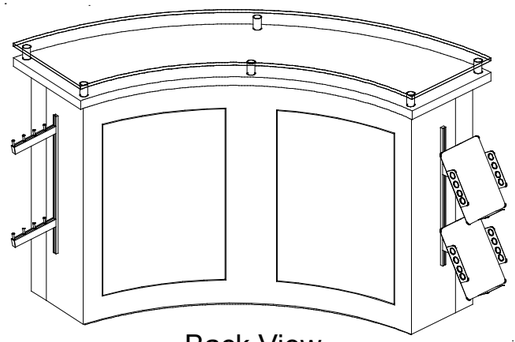
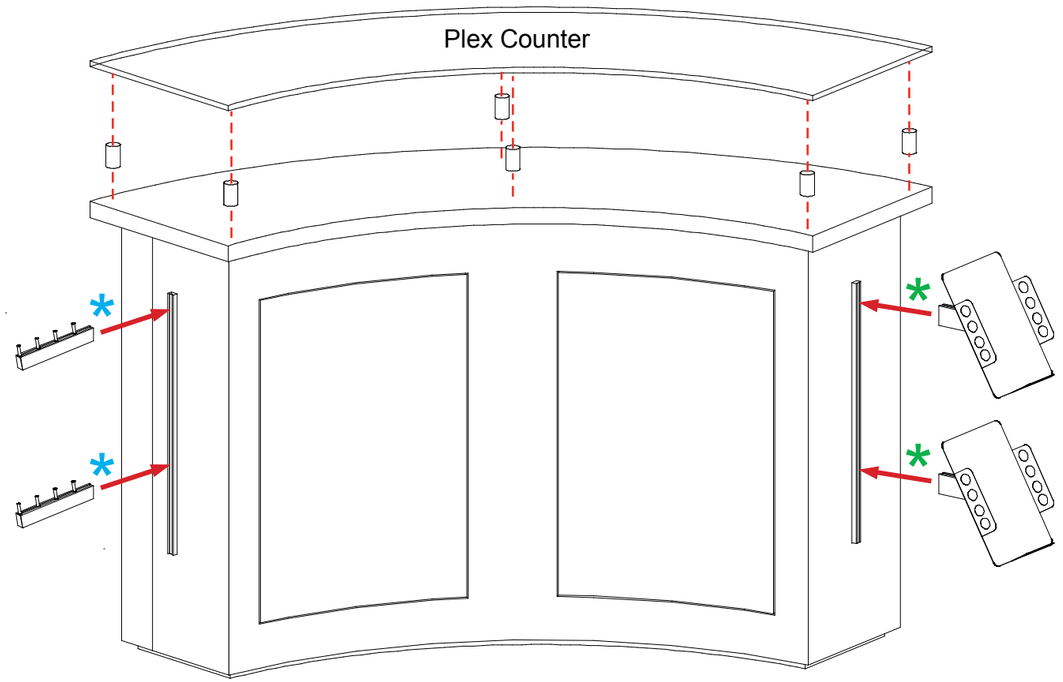
Back View