Product Name: MOD-1446
Process: DIRECT PRINT
Material: ACRYLIC / VINYL
Scale: 100%
Effective Date: 04/11/2017 AE

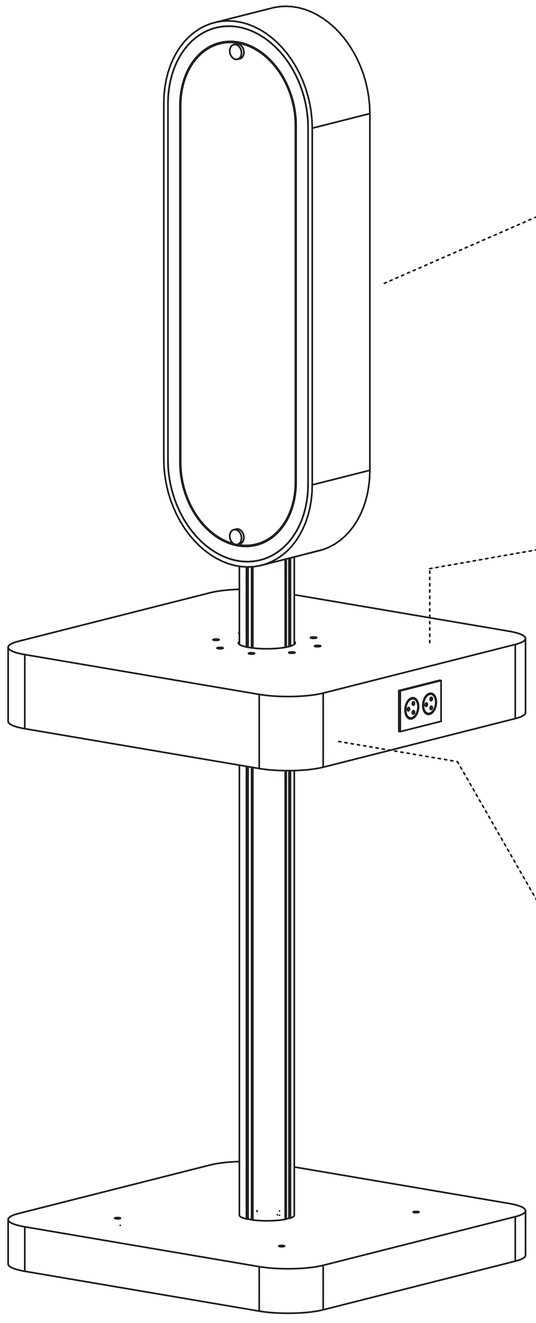

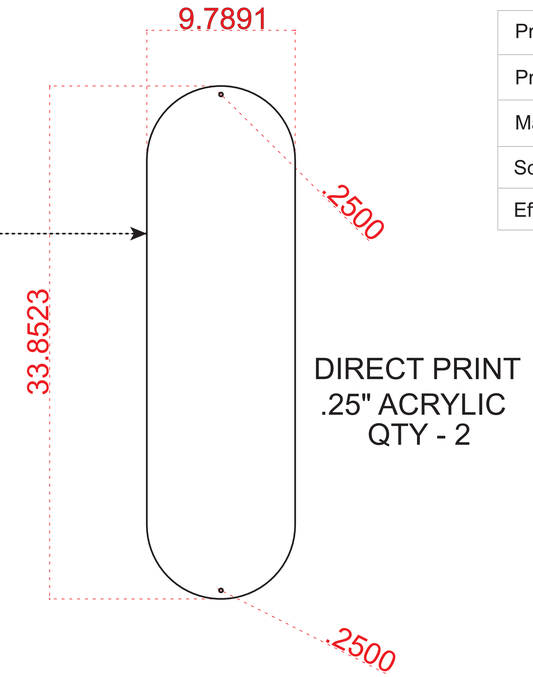

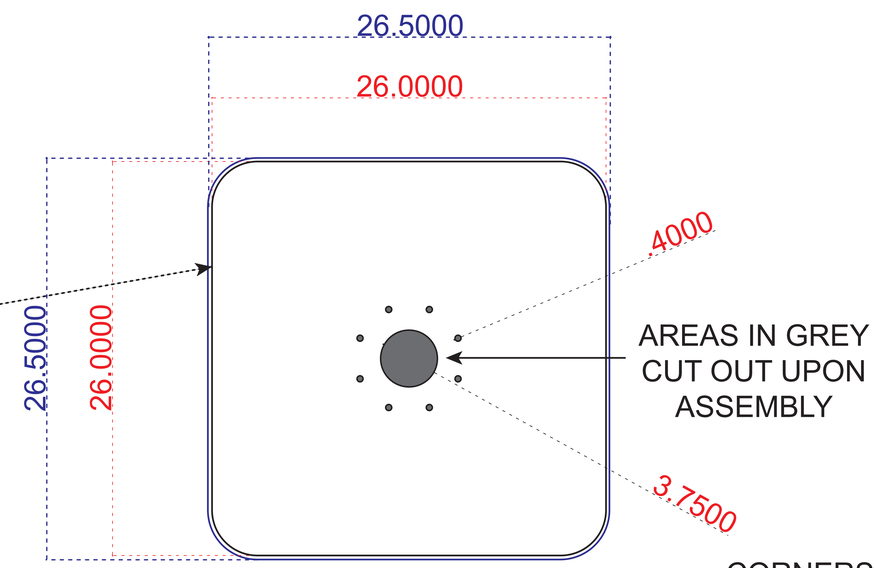

.25" BLEED FOR
VINYL GRAPHICS
SHOWN IN BLUE

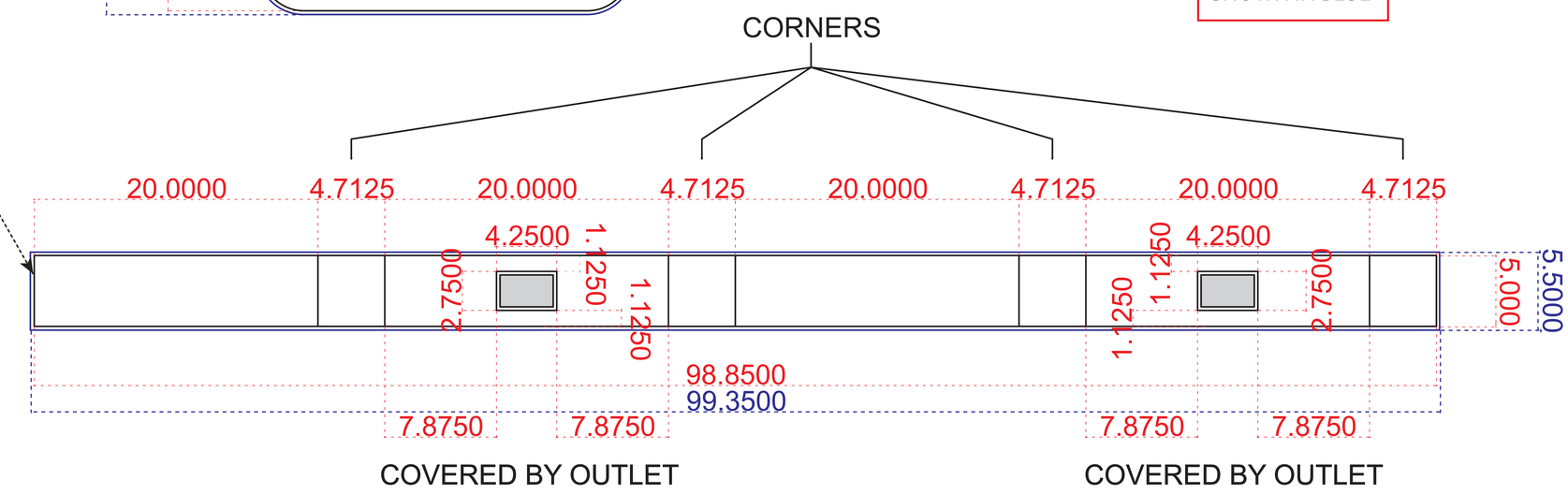

NOTE: Test frames may be required for guaranteed fitting of graphics

**NOTE: Graphic files must be @ 150 dpi Finished Size. *DO NOT* send Flattened Files. Production cannot manipulate the content, proportion, or color of these files.